SARMAAFARIN

Air-Cooled Condensers

AEROACOUSTIC

ISO 9001

Certificate No.: 9190.C308

FORM SSI - 09XD, 09CDF (98)

09XD, 09CDF

11 to 347 Nominal Tons

INTRODUCTION

With the 09 series air-cooled condensers SSI offers a choice of 11 models with a wide range of 43 to 347 tons of capacities in 09XD and 21 models with capacities from 11 to 130 tons in 09CDF units. 09 series condensers are manufactured to the highest quality standards and offer the following distinct advantages:

- Heavy-duty construction with casing made from galvanized sheet metal for maximum UV and corrosion resistance (09CDF series)
- Advanced circuitry and fin design with a wide selection of fin and tube materials
- High-efficiency fan motors and propellers with optimized air management design

Optimized coil angle for heat rejection and air flow (09XD series)

Technical Description

Coils

- Efficient large coil surface area maximizing heat transfer
- High performance aluminum fins and copper tubes (Copper or Anti-corrosion coated fins are applicable upon request)
- An integral sub-cooler circuit providing sub-cooling to effectively eliminate liquid flashing and enhancing cooling capacity without increasing the power input
- Condenser coil in V-shape with an open angle, allowing quieter air flow across the coil (09XD series)

Fans

- 800 mm diameter Low-noise axial fans with high-efficiency blade design leading to lower discharge pressure which guarantees the performance in reliable and decent condition
- Rigid fan mounting preventing start-up noise
- Fan diffuser (optional)

Fan Cycling Control

- During intermediate season, proper condensing temperature is controlled by fan control packages which permit shut off from one to all condenser fans or variable frequency drive (VFD) as an option.

Casing (09CDF models)

- Self-supporting design, fan sections individually partitioned
- Casing made from galvanized sheet metal, Lifting lugs for all models provided
- Service access doors for each fan motor

INTRODUCTION

Model number nomenclature

09 XD 04-MS 4 Al

Product Series
Air cooled Condenser

Coil Type
XD: V Type
CDF: Flat Type

Number of Fans
2 to 16

Fin Material
Al: Aluminum
Cu: Copper
Bf: Anti-Corrosion Coating

Coil Designation

Circuits
MS: Single circuit
MD: Double circuit

Table 1 - 09XD Series Technical Data													
Model	Nominal Cooling Capacity*	No. of Fans	No. of V	SPL***	Electrical Data		Connection****		Dimensions*****			Weight	
09XD					Power Input (kW)	Current (Amp.)	Inlet (inch.)	Outlet (inch.)	L (mm)	W (mm)	H (mm)	Al fin (kg)	Cu fin (kg)
02MS4	43.4	2	1	58.0	4.12	7.6	2 1/8"	1 3/8"	1208	2313	1990	521	551
04MS4	86.8	4	2	61.0	8.24	15.2	2 5/8"	1 5/8"	2416	2313	1990	848	908
06MS4	130.2	6	3	62.8	12.36	22.8	3 1/8"	2 1/8"	3624	2313	1990	1369	1459
08MS4	173.6	8	4	64.0	16.48	30.4	4 1/8"	2 1/8"	4832	2313	1990	1696	1816
04MD4**	86.8	4	2	61.0	8.24	15.2	2*2 1/8"	2*1 3/8"	2416	2313	1990	848	908
06MD4**	130.2	6	3	62.8	12.36	22.8	2*2 1/8"	2*1 3/8"	3624	2313	1990	1369	1459
08MD4**	173.6	8	4	64.0	16.48	30.4	2*2 5/8"	2*1 5/8"	4832	2313	1990	1696	1816
10MD4**	217.0	10	5	65.0	20.6	38	2*3 1/8"	2*2 1/8"	6040	2313	1990	2217	2367
12MD4**	260.4	12	6	65.8	24.72	45.6	2*3 1/8"	2*2 1/8"	7248	2313	1990	2738	2918
14MD4**	303.8	14	7	66.5	28.84	53.2	2*3 1/8"	2*2 1/8"	8456	2313	1990	3065	3275
16MD4**	347.2	16	8	67.0	32.96	60.8	2*4 1/8"	2*2 1/8"	9664	2313	1990	3392	3632

* Rated in accordance with AHRI Standard 460 at standard rating conditions as follows:
-95 °F entering air temperature
-125 °F saturated condensing temperature, i.e., Δt=30 °F (Δt=difference between saturated condensing temperature and entering air temperature)
-Capacities in Ton for R134a and at 0 ft altitude
**In double circuit models the capacity is divided equally between two similar circuits.
***SPL= Sound Pressure Level in dB at 33.0 ft (10 m)
****For field piping contact SSI trained engineers.
*****L = Length, W= Width, H= Height

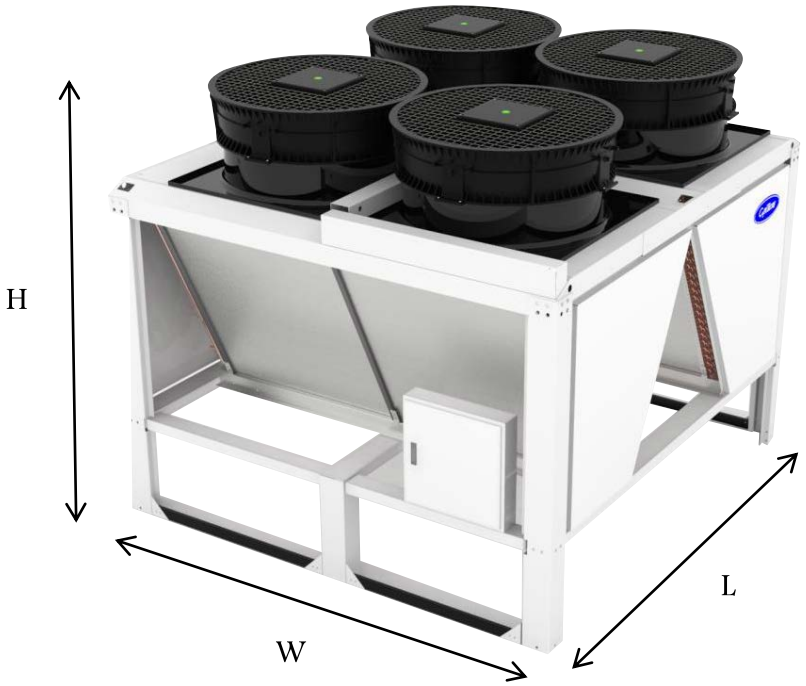

Figure 1 - 09XD Series Dimensions

Note: the sound diffuser is an optional component, it may be recommended in sound sensitive ereas.

Table 2 - 09CDF Series technical data												
Model	Nominal Cooling Capacity*	No. of Fans	SPL***	Electrical Data		Connection****		Dimensions*****			Weight	
09CDF				Power Input (kW)	Current (Amp.)	Inlet (inch.)	Outlet (inch.)	L (mm)	W (mm)	H (mm)	Al fin (kg)	Cu fin (kg)
01MS2	11.1	1	55.0	2.06	3.8	1 3/8"	1 1/8"	1557	1207	1365	149	196
01MS3	14.7	1	55.0	2.06	3.8	1 3/8"	1 1/8"	1557	1207	1365	162	209
01MS4	16.2	1	55.0	2.06	3.8	1 3/8"	1 1/8"	1557	1207	1365	177	237
02MS2	22.8	2	58.0	4.12	7.6	1 3/8"	1 1/8"	2787	1207	1365	348	435
02MS3	29.1	2	58.0	4.12	7.6	1 5/8"	1 1/8"	2787	1207	1365	378	496
02MS4	32.5	2	58.0	4.12	7.6	1 5/8"	1 1/8"	2787	1207	1365	411	556
03MS2	34.2	3	59.8	6.18	11.4	1 3/8"	1 1/8"	3988	1207	1365	564	712
03MS3	43.6	3	59.8	6.18	11.4	2 1/8"	1 3/8"	3988	1207	1365	612	800
03MS4	48.8	3	59.8	6.18	11.4	2 1/8"	1 3/8"	3988	1207	1365	665	841
04MS2	45.7	4	61.0	8.24	15.2	2 1/8"	1 3/8"	5190	1207	1365	631	776
04MS3	58.2	4	61.0	8.24	15.2	2 1/8"	1 3/8"	5190	1207	1365	676	876
04MS4	65.0	4	61.0	8.24	15.2	2 1/8"	1 5/8"	5190	1207	1365	725	981
04MD2**	45.7	4	61.0	8.24	15.2	2*1 3/8"	2*1 1/8"	2787	2351	1365	631	825
04MD3**	58.2	4	61.0	8.24	15.2	2*1 5/8"	2*1 1/8"	2787	2351	1365	685	929
04MD4**	65.0	4	61.0	8.24	15.2	2*1 5/8"	2*1 1/8"	2787	2351	1365	745	1039
06MD2**	68.6	6	62.8	12.36	22.8	2*1 3/8"	2*1 1/8"	3988	2351	1365	894	1168
06MD3**	87.2	6	62.8	12.36	22.8	2*2 1/8"	2*1 3/8"	3988	2351	1365	972	1316
06MD4**	97.6	6	62.8	12.36	22.8	2*2 1/8"	2*1 3/8"	3988	2351	1365	1056	1474
08MD2**	91.4	8	64.0	16.48	30.4	2*2 1/8"	2*1 3/8"	5190	2351	1365	1157	1505
08MD3**	116.3	8	64.0	16.48	30.4	2*2 1/8"	2*1 3/8"	5190	2351	1365	1258	1694
08MD4**	130.2	8	64.0	16.48	30.4	2*2 1/8"	2*1 5/8"	5190	2351	1365	1367	1895

*Rated in accordance with AHRI Standard 460 at standard rating conditions as follows:
-95 °F entering air temperature
-125 °F saturated condensing temperature, i.e., Δt=30 °F (Δt=difference between saturated condensing temperature and entering air temperature)
-Capacities in Ton for R134a and at 0 ft altitude
**In double circuit models the capacity is divided equally between two similar circuits.
***SPL= Sound Pressure Level in dB at 33.0 ft (10 m)
**** For field piping contact SSI trained engineers.
***** L = Length, W= Width, H= Height

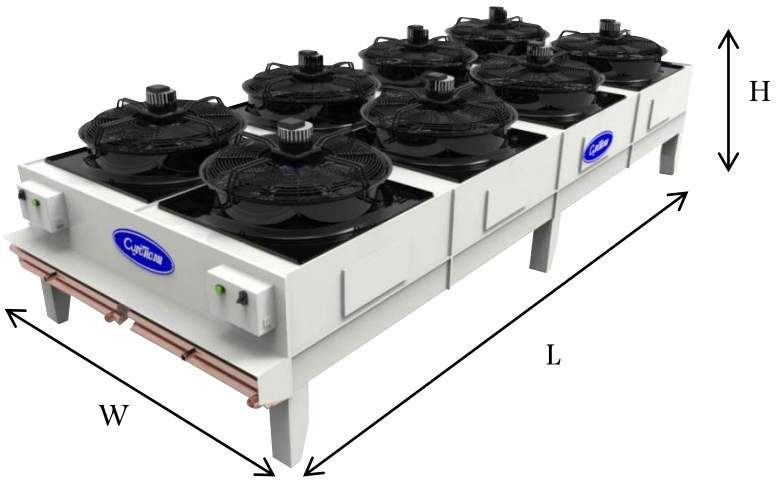

Figure 2 - 09CDF Series Dimensions

Sound Pressure Level

All nominal sound pressure level information is given for the following conditions:

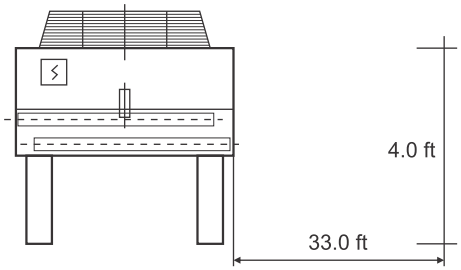

Remarks about the sound pressure level:

- The sound pressure level has been measured by precision instruments in open field on a compact semi-reverberant base.
- The result obtained on a site may be different than the stated value, due to sound reflection phenomena (wall, etc.).
- Reduction of sound pressure as a function of distance is theoretical. Reflection phenomena may modify the final result on site, on total sound pressure level or on some frequencies.
- For other conditions, the required nominal sound pressure level has to be determined as follows: Select correction value for other conditions from table3.

Table 3 - Correction values for different distances						
Distance (ft)	15	33	60	90	120	150
Correction by (dB)	-7	0	5	9	11	13

The required nominal sound pressure level to be looked up in the selection data is:

Sn=S+dS

(S=your required sound level)

Example:

Sound pressure level of 55 dB required at 60 ft.

Correction factor	dS:	5 dB
Required sound level	S	55 dB
Required nominal sound level	S_n:	55+5=60 dB

Nominal Capacity

All catalogue capacities are based on:

- Refrigerant: R134a
- Altitude: 0 ft
- Δt=30 °F (Difference between saturated condensing temperature and entering air temperature)

For other conditions the required nominal capacity has to be determined as follows:

- Select correction factors for other conditions from Table 4 to Table 6.
- The required nominal capacity to be looked up in the selection data is:

Qn=Q/(f1×f2×f3)

(Q=your required capacity)

Example:

- Refrigerant: R134a,
- Ambient temperature: 90 °F, with Δt 23°F,
- Altitude: 2000ft,
- Required capacity: 30Ton.
- From Table 4 @ Δt=23°F, f1=0.767
- From Table 5 for R134a, f2=1
- From Table 6 @2000ft altitude, f3=0.958
- Required capacity Q= 30Ton

Qn=30/(0.767×1×0.958)=40.83

- From Table 7 @ 90 °F ambient temperature, unit 09CDF03MS3 and from Table 8 unit 09XD02MS4 meets required nominal capacity Qn.

Table 4 - Correction Factor for Δt									
Δt (°F)	15	18	20	23	25	27	30	33	35
Factor f1	0.500	0.600	0.666	0.767	0.833	0.900	1.000	1.100	1.167

Table 5 - Correction Factor for Different Refrigerants			
Refrigerant	R134a	R22	R407C
Factor f2	1	1.05	1.03

Table 6 - Correction Factor for Different Altitudes									
Altitude(ft)	0	1000	2000	3000	4000	5000	6000	7000	8000
Factor f3	1	0.980	0.958	0.936	0.917	0.896	0.875	0.854	0.834

Table 7 - 09CDF Series Performance Data									
Model 09CDF	Capacity (Ton)*								
	Entering Air Temperature °F								
	60	70	80	90	100	105	110	120	125
01MS2	12.0	11.8	11.5	11.3	11.0	10.9	10.8	10.6	10.5
01MS3	15.8	15.5	15.2	14.9	14.5	14.4	14.2	13.9	13.8
01MS4	17.4	17.1	16.8	16.4	16.0	15.9	15.7	15.4	15.2
02MS2	24.5	24.1	23.6	23.1	22.5	22.3	22.1	21.6	21.4
02MS3	31.3	30.7	30.1	29.4	28.7	28.4	28.1	27.6	27.3
02MS4	35.0	34.4	33.6	32.9	32.2	31.8	31.5	30.8	30.5
03MS2	36.8	36.2	35.4	34.6	33.9	33.5	33.1	32.5	32.1
03MS3	46.8	46.0	45.1	44.1	43.1	42.6	42.2	41.3	40.9
03MS4	52.5	51.6	50.5	49.4	48.3	47.8	47.3	46.3	45.8
04MS2	49.1	48.3	47.3	46.2	45.2	44.7	44.2	43.3	42.9
04MS3	62.5	61.4	60.2	58.8	57.5	56.9	56.3	55.1	54.6
04MS4	69.9	68.7	67.3	65.8	64.3	63.6	62.9	61.7	61.0
04MD2	49.1	48.3	47.3	46.2	45.2	44.7	44.2	43.3	42.9
04MD3	62.5	61.4	60.2	58.8	57.5	56.9	56.3	55.1	54.6
04MD4	69.9	68.7	67.3	65.8	64.3	63.6	62.9	61.7	61.0
06MD2	73.7	72.5	71.0	69.4	67.8	67.1	66.4	65.0	64.3
06MD3	93.8	92.1	90.2	88.2	86.2	85.3	84.4	82.7	81.8
06MD4	104.9	103.1	100.9	98.7	96.5	95.4	94.4	92.5	91.5
08MD2	98.2	96.5	94.5	92.4	90.3	89.4	88.4	86.6	85.7
08MD3	125.0	122.9	120.3	117.7	115.0	113.8	112.6	110.3	109.1
08MD4	140.0	137.5	134.7	131.7	128.7	127.4	126.0	123.4	122.1

Table 8 - 09XD Series Performance Data									
Model 09XD	Capacity (Ton)*								
	Entering Air Temperature °F								
	60	70	80	90	100	105	110	120	125
02MS4	47.9	46.4	45.2	44.0	42.8	42.3	41.7	40.7	40.2
04MS4	95.8	92.9	90.3	87.9	85.6	84.6	83.5	81.4	80.3
06MS4	143.7	139.3	135.5	131.9	128.4	126.9	125.2	122.1	120.5
08MS4	191.6	185.8	180.6	175.8	171.2	169.1	167.0	162.7	160.6
04MD4	95.8	92.9	90.3	87.9	85.6	84.6	83.5	81.4	80.3
06MD4	143.7	139.3	135.5	131.9	128.4	126.9	125.2	122.1	120.5
08MD4	191.6	185.8	180.6	175.8	171.2	169.1	167.0	162.7	160.6
10MD4	239.6	232.2	225.8	219.8	214.1	211.4	208.7	203.4	200.8
12MD4	287.5	278.6	270.9	263.7	256.9	253.7	250.5	244.1	240.9
14MD4	335.4	325.1	316.1	307.7	299.7	296.0	292.2	284.8	281.1
16MD4	383.3	371.5	361.2	351.7	342.5	338.3	334.0	325.5	321.2

*Capacities in Ton for R134a, altitude 0 ft and Δt=30 °F.

APPROXIMATE DIMENSIONS (mm)

Figure 3 - 09CDF Series Approximate Dimensions

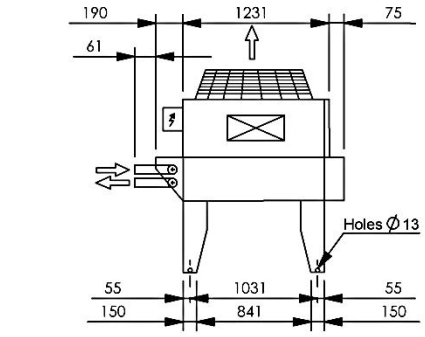

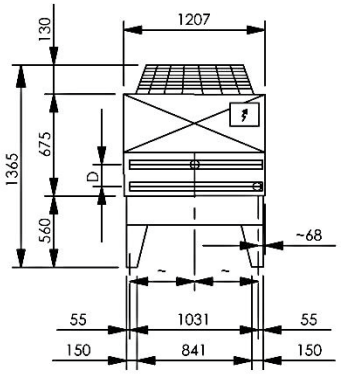

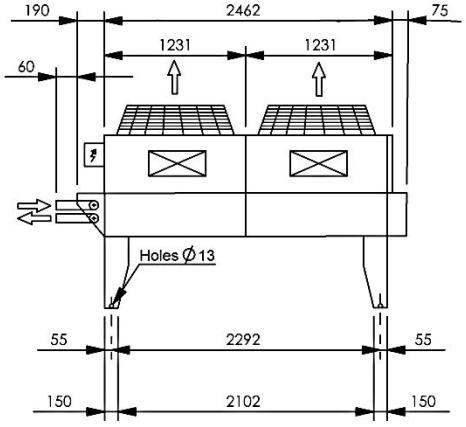

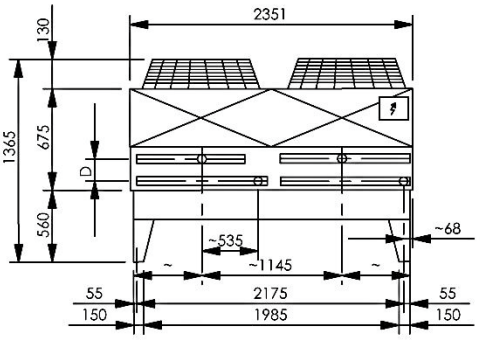

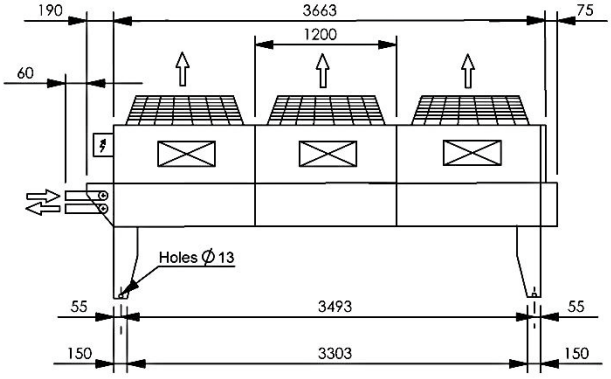

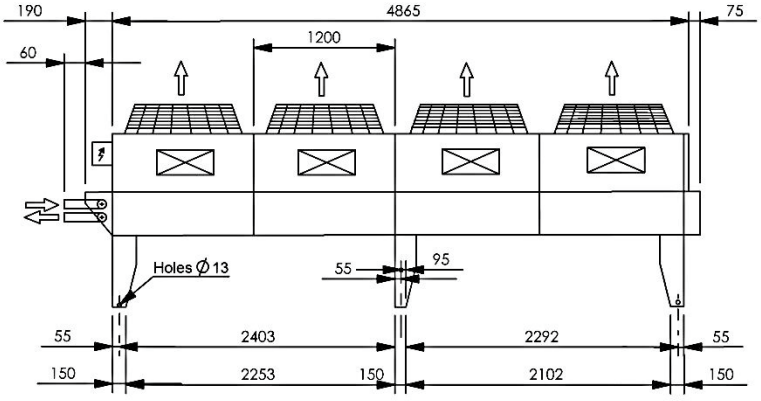

APPROXIMATE DIMENSIONS (mm)

Figure 4 - 09XD Series Approximate Dimensions (L is the length of 09XD in Table 1)

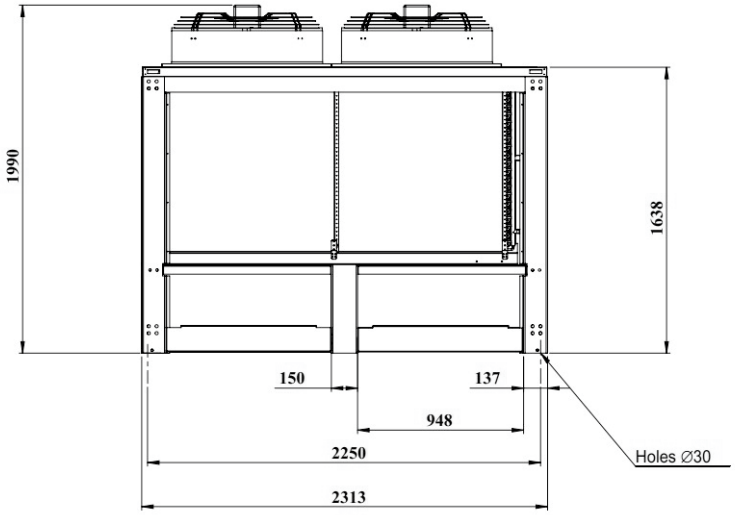

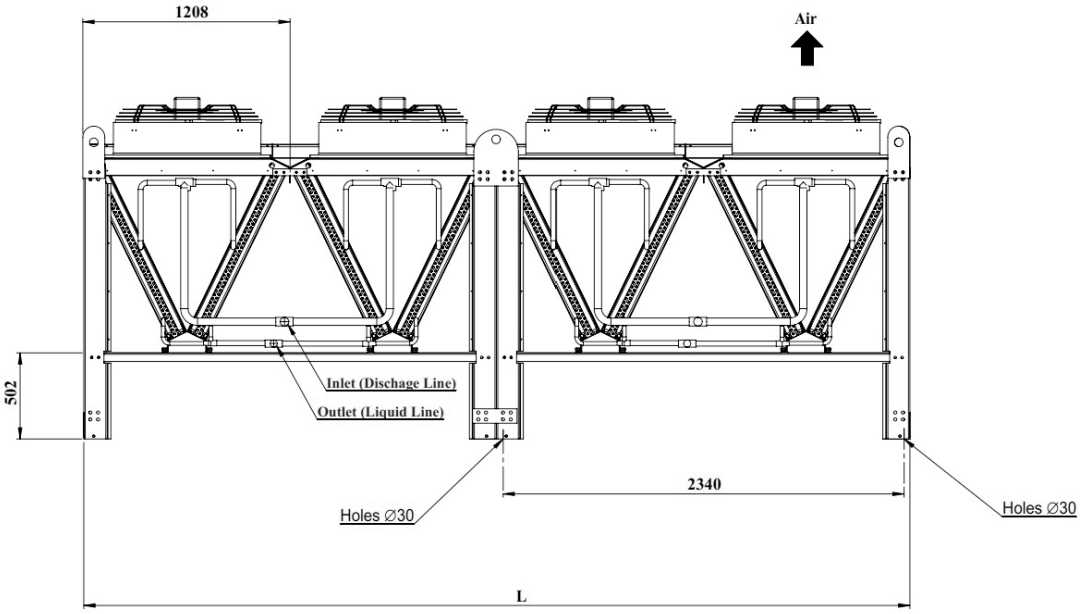

Sanaye Sarmaafarin Iran
شرکت صنایع سرما آفرین ایران
(کریر ترموفریگ)

No. 194, W. Khorramshahr (Apadana) Ave., TEHRAN-15337, P. O. BOX: 13145-1799 Tel: 88762038 Fax: 88762033
سهروردی شمالی، خیابان خرمشهر، شماره ۱۹۴، تهران - ۱۵۳۷۷، صندوق پستی: ۱۷۹۹-۱۳۱۴۵ تلفن: ۸۸۷۶۲۰۳۸ فاکس: ۸۸۷۶۲۰۳۳
Manufacturer reserves the right to discontinue or change at time, specifications of designs without notice and without incurring obliqations
www.sarmaafarin.com www.ssi.co.ir